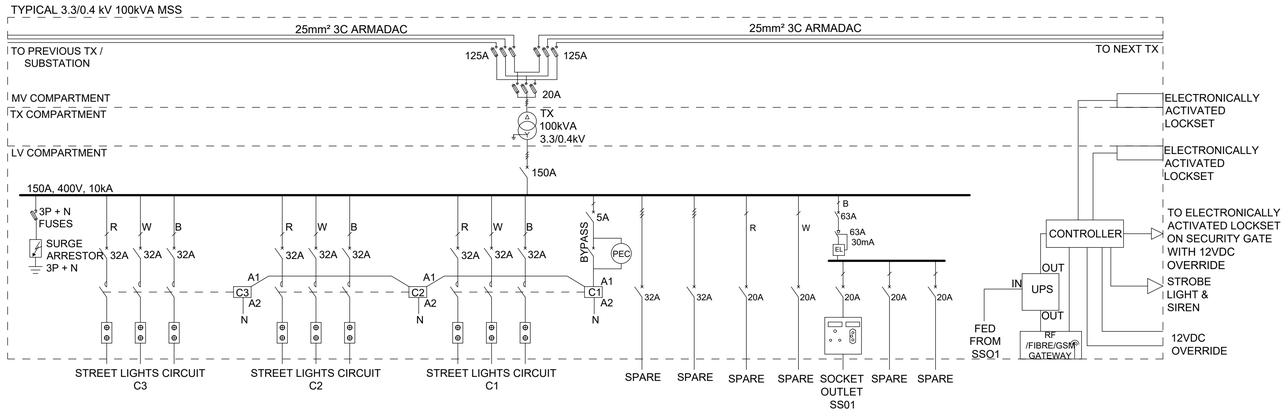

TYPICAL ANTI-VANDAL MSS WITH ELECTRONIC SECURITY SCHEMATIC

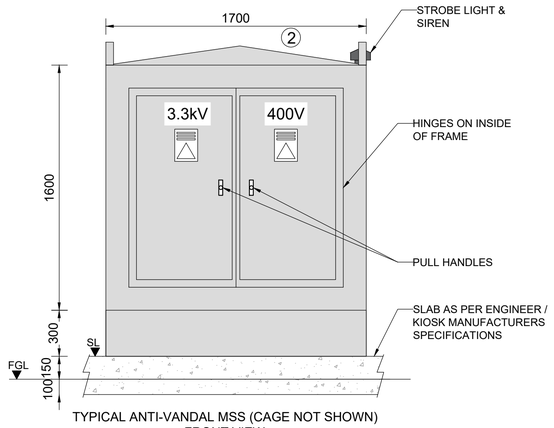

TYPICAL ANTI-VANDAL MSS (CAGE NOT SHOWN)
FRONT VIEW
(1:20)

LEGEND	
SYMBOL	DESCRIPTION
	TRANSFORMER
	3- PHASE CIRCUIT BREAKER
	SURGE ARRESTOR
	SINGLE PHASE CIRCUIT BREAKER
	FUSE
30mA	30mA EARTH LEAKAGE UNIT
A1 C1 A2 N	3P 32A AC1 CONTACTOR WITH 230V COIL
PEC	10 Amp PHOTO CELL WITH 7-PIN BASE
	60A CONNECTOR BLOCK

DRAWING NOTES:

1. THE MSS IS TO HAVE THE FOLLOWING MINIMAL ELECTRONIC SECURITY HARDWARE AS PER SPECIFICATION:
   - OPTICAL OPEN/ CLOSE SENSORS FOR MV & LV DOORS & CAGE GATES.
   - VIBRATION SENSORS FOR THE SENSING OF ANY TAMPERING ON THE CAGE & MSS.
   - STROBE LIGHT & SIREN
2. ALL EQUIPMENT TO BE APPROVED BY ENGINEER PRIOR TO PURCHASE.
3. FULL INSTALLATION TO COMPLY WITH RELEVANT SANS CODES.
4. SOCKET OUTLET TO COMPLY WITH SANS 164-1 & -2
5. ALL AC ELECTRONIC EQUIPMENT TO ACCEPT OPERATING VOLTAGE RANGE OF 180-270V
6. ONLINE UPS TO BE SIZED ACCORDINGLY FOR MINIMUM 2-HOUR BACK-UP.

KEY NOTES:

(1) DESIGN OF ENCLOSURE & SECURITY CAGE BASED ON 100KVA 3.3KV/ 0.4KV TRANSFORMER. FINAL DIMENSIONS BASED ON ACTUAL TRANSFORMER PROPOSED.

DISTRIBUTION BOARD INFORMATION			
BOARD NO. : TYPICAL MSS			
(TYPE) CONSTRUCTION		MAX. DIMENSIONS	
RECESSED		HEIGHT (mm)	1900
SEMI-RECESSED		WIDTH(mm)	1800
SURFACE		DEPTH (mm)	1500
WALL MOUNTED		PLINTH	300
FLOOR STANDING	X	IP RATING	IP65
DOORS	X		
LOCKABLE DOORS	X	MATERIAL	
CUPBOARD		ZINTEC STEEL	
SPARE SPACE	30%	FIBRE GLASS	
PLINTH	X	4mm 3CR12 POWDER COATED	X
SERVICE ACCESS		COLOUR	
FRONT	X	OUTER COVER	RAL 6005
REAR		INNER FRAME	WHITE
SIDES	X	INNER COVER	WHITE
INCOMER		OUTGOING	
TOP ENTRY		TOP ENTRY	
BOTTOM ENTRY	X	BOTTOM ENTRY	X
SIDE ENTRY		SIDE ENTRY	
SECURITY CAGE			
SERVICE ACCESS		FRAME MATERIAL	
TOP		GALVANIZED STEEL EPOXY COATED	X
FRONT	X	FENCE	
LOCKS		DIAMOND RAZOR MESH	X
ELECTRONIC LOCKS	X	ANTI-CUT & ANTI-CLIMB	
PAD LOCKABLE (KEYED ALIKE)		COLOUR	RAL 6005

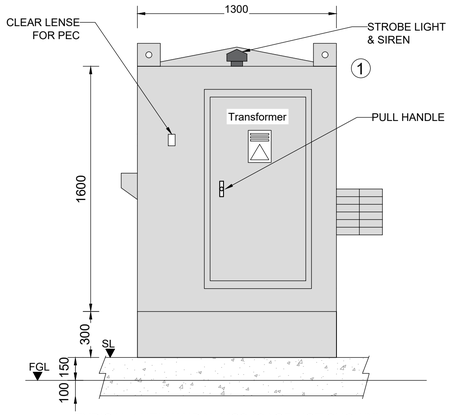

TYPICAL ANTI-VANDAL MSS (CAGE NOT SHOWN)
SIDE VIEW
(1:20)

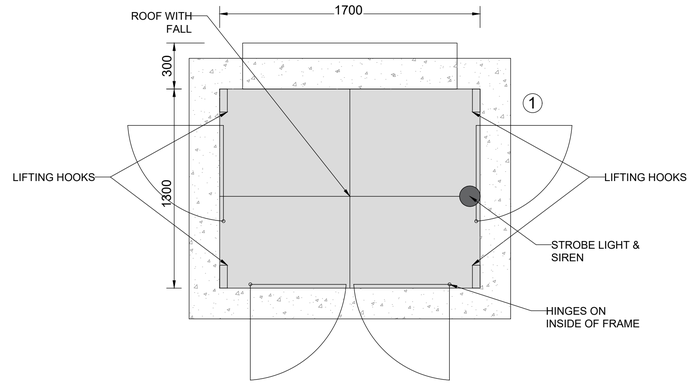

TYPICAL ANTI-VANDAL MSS (CAGE NOT SHOWN)
TOP VIEW
(1:20)

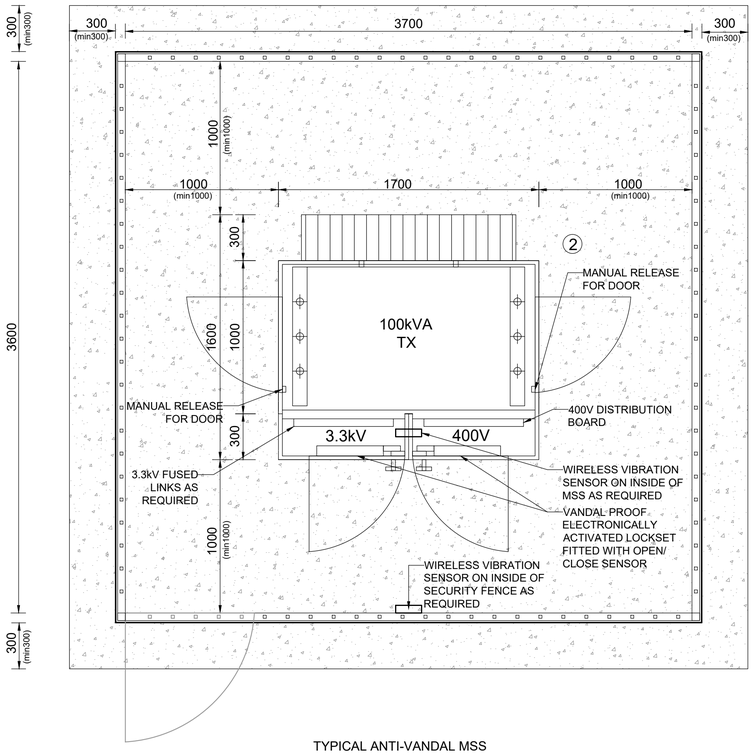

TYPICAL ANTI-VANDAL MSS
EQUIPMENT LAYOUT
(1:20)

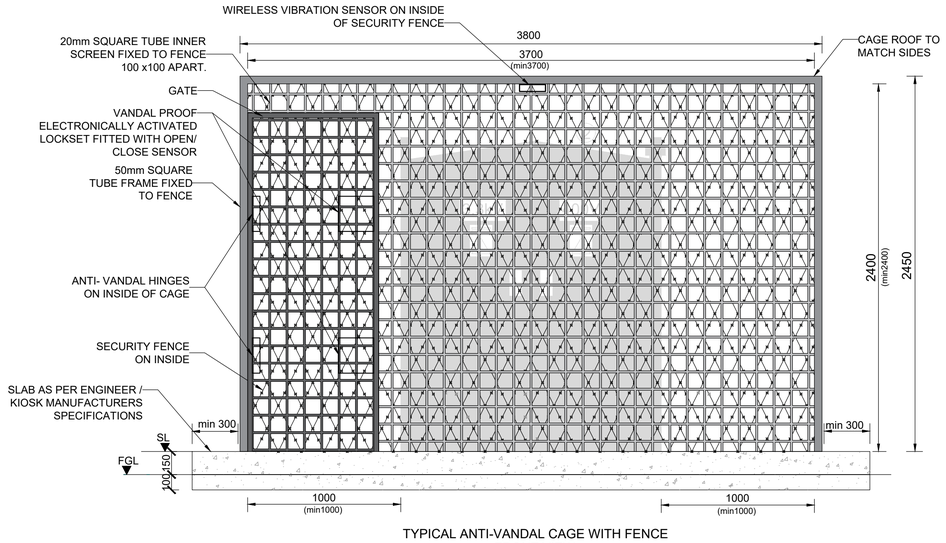

TYPICAL ANTI-VANDAL CAGE WITH FENCE
FRONT VIEW
(1:20)

ELECTRONIC SECURITY SCHEDULE		
ITEM	DESCRIPTION	QUANTITY
1.	MSS	
1.1	ELECTRONICALLY ACTIVATED LOCKSET	2
1.2	VIBRATION SENSOR	1
1.3	OPEN/CLOSE SENSOR	2
1.4	OVERRIDE	1
1.5	STROBE	1
1.6	SIREN	1
2.	CAGE	
2.1	ELECTRONICALLY ACTIVATED LOCKSET	2
2.2	VIBRATION SENSOR	1
2.3	OPEN/CLOSE SENSOR	1
2.4	OVERRIDE	1

No.	DATE	REVISION	APPROVED
V1	10-07-2020	ORIGINAL VERSION	D.N.

SANRAL TYPICAL DRAWINGS

COPYRIGHT: THIS DRAWING IS PROTECTED IN TERMS OF THE COPYRIGHT ACT No. 98 OF 1978 AND MAY NOT BE REPRODUCED WITHOUT THE PERMISSION IN WRITING FROM SANRAL.
CONDITIONS FOR USE: CONSULTANTS APPOINTED BY SANRAL SHALL INCORPORATE THE TYPICAL DETAILS HEREON INTO THEIR SPECIFIC DESIGN FOR WHICH THEY WILL ASSUME FULL PROFESSIONAL RESPONSIBILITY. THIS TYPICAL DRWING MAY NOT BE USED FOR TENDER PURPOSES.

SANRAL
SOUTH AFRICAN NATIONAL ROADS AGENCY SOC LTD
BUILDING SOUTH AFRICA THROUGH BETTER ROADS

HEAD OFFICE
48 Tambotie Avenue
Val de Grace
Pretoria
0184

PO Box 415
Pretoria 0001
South Africa
Tel: (012) 844 8000

EASTERN REGION
58 van Eck Place
Pietermaritzburg
3201

PO Box 100410
Scottsville
3209
Tel: (033) 392 8100

APPROVED

Date:

TYPICAL DRAWINGS - ELECTRICAL

ANTI-VANDAL MINI-SUBSTATION WITH ELECTRONIC SECURITY

SANRAL DOC No. (PDF): -

SANRAL DOC No. (DWG): -

SANRAL DRAWING No.: TD-E-P-1001-1-V1

TD-E-P-1001-1-V1